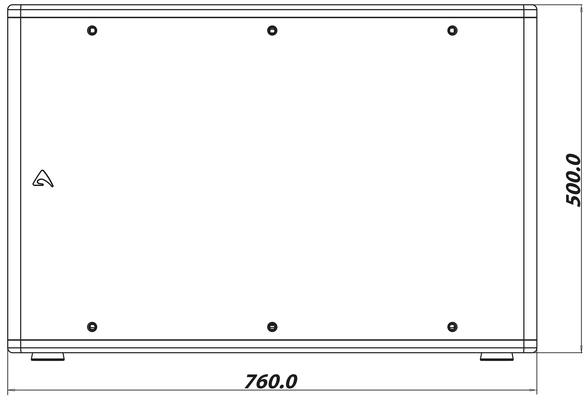
500.0
760.0

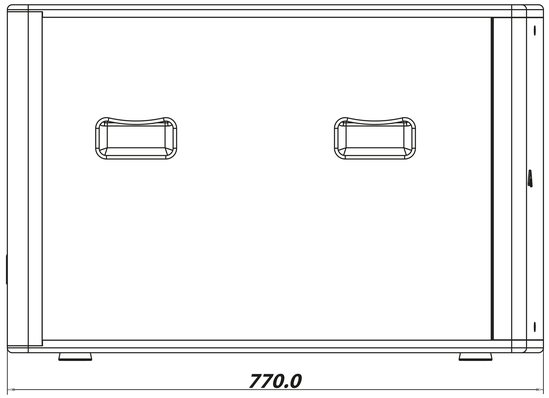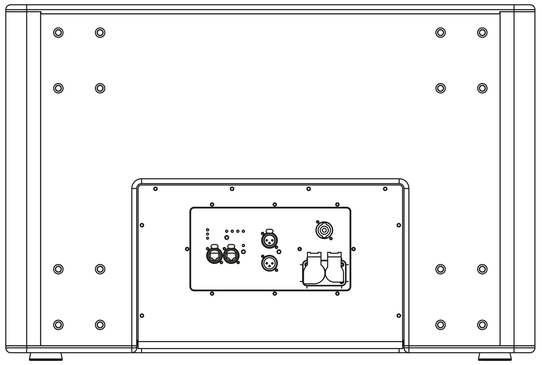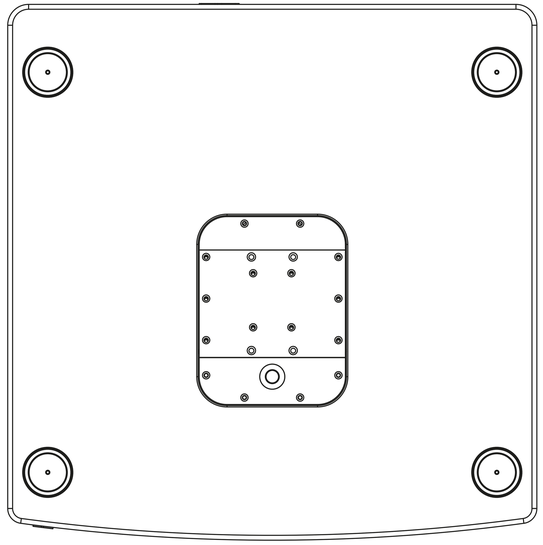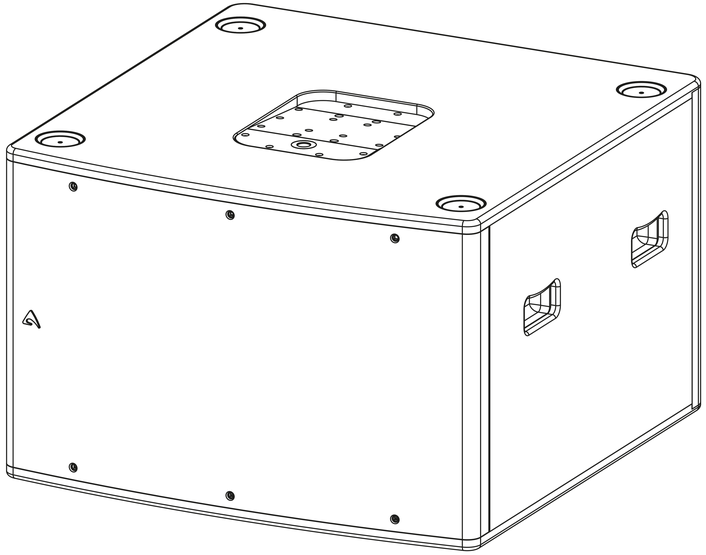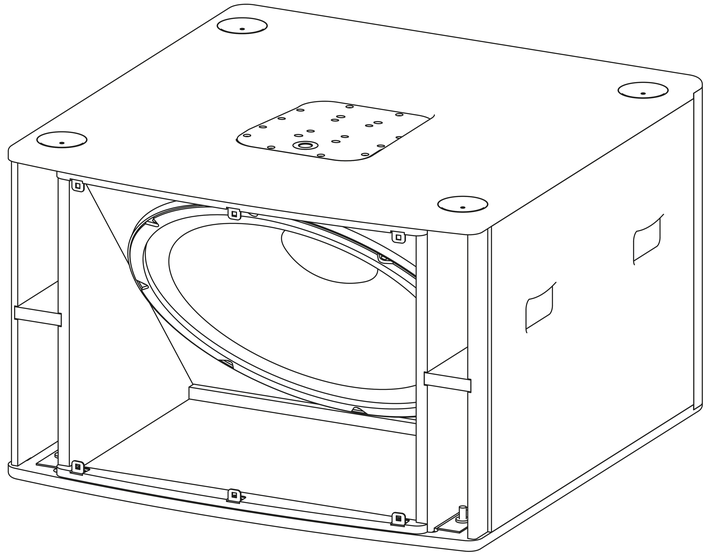
770.0